BLUEPRINT

212 243 6300
www.blueprintlighting.com

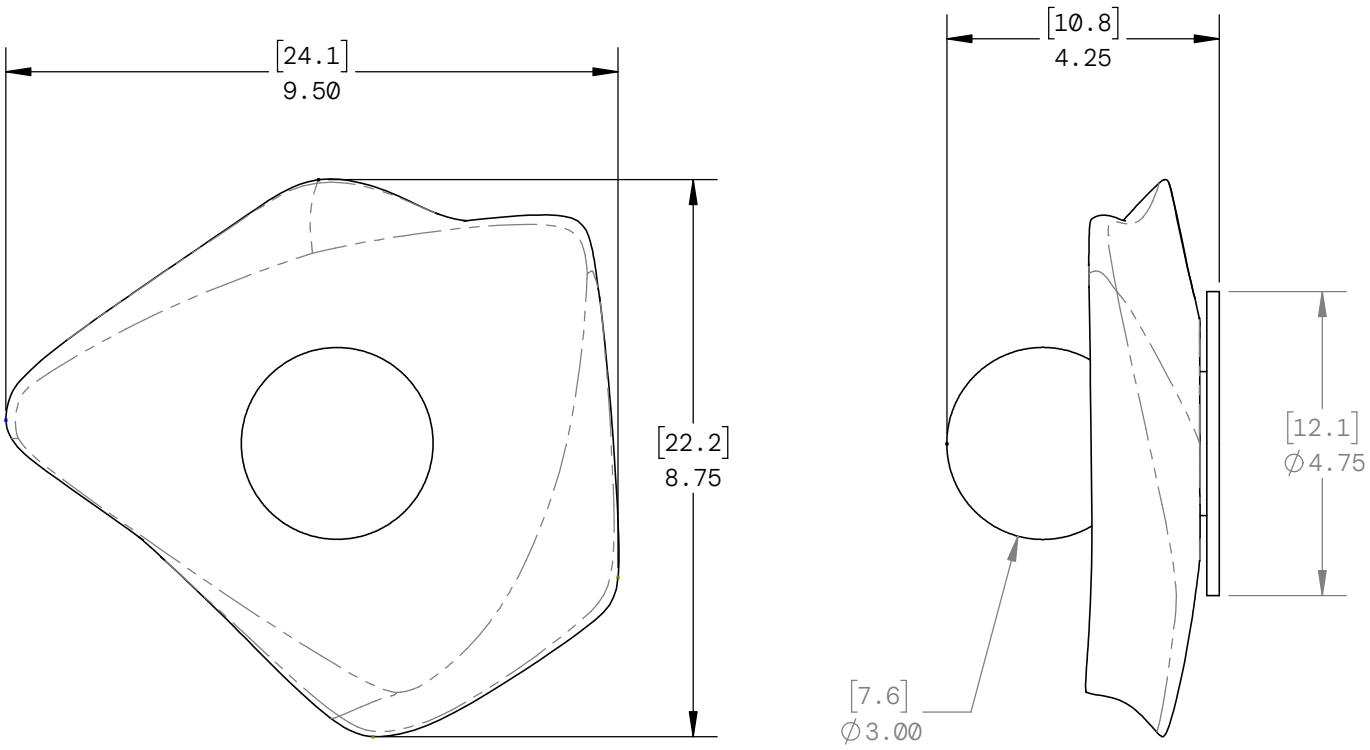

Product
Pothos

Finishes
Wood: Cerused, Chene, Sepia, Tobacco, Ebonized
All Metal Finishes
Blown Glass, Honed Alabaster

Dimensions As Shown
D 4.25 in / 10.8 cm
H 8.75 in / 22.2 cm
W 9.5 in / 24.1 cm

Category
Wall

Plug In Option
No

Mounting
4 in J Box

Collection
Krasnogorov x Blueprint

Lamping
E12 2.5W T3

Weight
3 lb

Backplate
4.75 in / 12.1 cm